# WiesenTHAL

# COMFORTABLE

No matter how fast the fashion changes,
only those profound designs can become classical.
The most graceful colors are used to
wind its way to the deepest and most beautifu dream in you life.

三位260*101*82cm

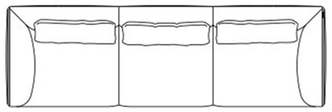

双位190*101*82cm

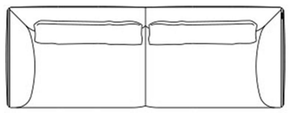

单位110*101*82cm

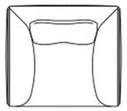

## M809沙发

三位260*101*82cm

三位260*101*82cm

三位260*101*82cm

单位110*101*82cm

单位110*101*82cm

# LIGHT LUXURY

In the middle of the living room,
A light luxury living room sofa like a bright pearl,
Exudes a unique charm.
It's not just a piece of furniture,
It is a symbol of the quality of life.

## #巴比伦二代沙发

SIZE:组合转角
406*353*63高(111深)CM

# SIMPLICITY

No matter how fast the fashion changes,
only those profound designs can become classical.
The most graceful colors are used to
wind its way to the deepest and most beautiful
dream in you life.

## #M812沙发

SIZE:转角沙发+边几
ABC:420*320*85CM

# M821#沙发

单位121*100*67cm
双位203*100*67cm
三位260*100*67cm
四位323*100*67cm

双位203*100*67cm

单位121*100*67cm

# RANDOM COMBINATION

What Suits You Is The Best

S836#沙发

双位222*103*70cm

# high-end

Enjoy Tranquility Without Restraint
The Sunlight Peeked In Through The Window
And Poured Over Me.

S837#沙发

# STYLISH DECOR

## METICULOUS ATTENTION TO DETAIL

# ART AND LIFE

A Pound Of Phosphorus Spirit,Returning To The Same Place
Adhere To The Combination Of Art And Life,
Let Classics Surpass Expectations, Turn Legends Into Immortality,
Lead The Era, And Jointly Build Brilliance.

# MARBLE MATERIAL

Light luxury dining tables usually adopt a simple and atmospheric designstyle,The lines are smooth and elegant.

X36-B版餐台
size:220*100*75cm

M812#餐台
size:150*150*83cm

# SENSE OF DESIGN

S837#圆餐台
size:150*80*75cm

S837#餐椅
size:58*55*76cm

Unique Shaping Designs,noble Color Selection,
High-grade Raw Materials And Exquisitecraftsmanship,
Result In Really Superior Andclassical Works.

M812#餐台

size:230*118*81cm

# INTHE WORLD

**S836#长餐台**
size：240*100*76cm

**A125#餐椅**
size：64*58*94cm

**S837#玄关**
size：180*40*96cm

**S837#餐边柜**
size：250*50*89cm

## 丝绸之路#餐台

size：300*110*78cm

Unique Shaping Designs,noble Color Selection,
High-grade Raw Materials And Exquisitecraftsmanship,
Result In Really Superior Andclassical Works.

The Best Building Is Like Thiswe Live In It,
But We Don't Feel Where Nature Ends
Where Does Art Start

## 大使#书桌

size：230*69*76cm

## 大使#书椅

size：常规

## 大使#书椅
size:常规cm

## M805#书桌
size:261*85*75cm

# CEO STYLE

Embrace Calmness And Steadfastness With A Single Color That Is Straightforward And Powerful,

M812#书桌
size: 200*85*75cm

Welcome The Breeze And Sunshine With Ingenious Design
Design Is Free, And Art Should Not Be Shelved.

M812#书椅
size: 88*86*130cm

# VESTIBULE

The Dusty Home Is Not Suitable For Lying Directly On The Bed.
So Collapse Into The Embrace Of The Sofa.
The Soft And Lightweight Sofa Allows You To Lie Down Comfortably
When You Are Tired And Tired.
It Is Not So Much A Comfort After Work As A Gift For The Whole Family

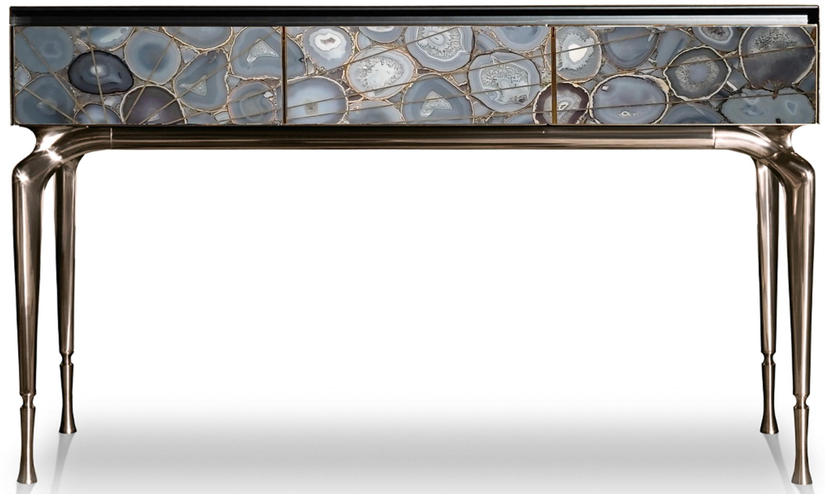

# CAUSED BYACRAFTSMAN.
# THINGS HAVE SOULS

Pouring Craftsmanship Into The Product,
Striving To Create The Delicacy Of Every Detail.
From The Moment We See It,
We Can Feel The Resonance Of Character Unity.

# TRUE MINIMALISM

**Not pursuing ostentatious vanity**
**It's a way of life that won't be compromised due to poor environment**
**I won't be distracted by the bustling world and lose my attitude towards life**

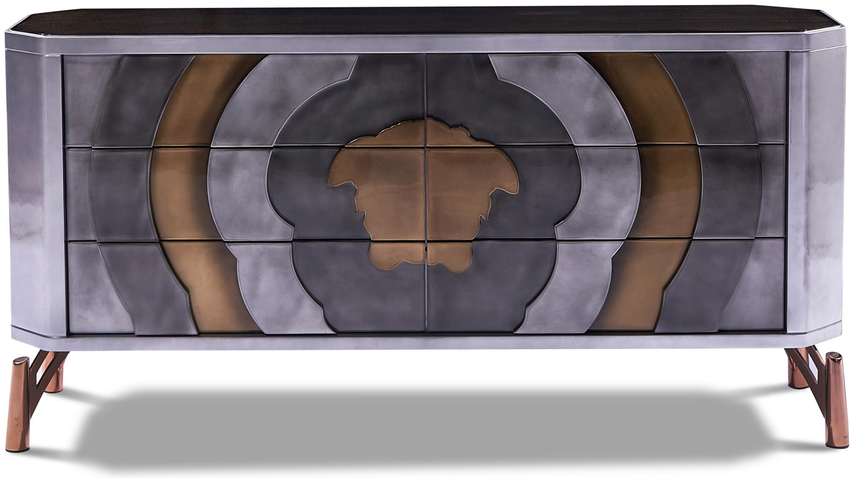

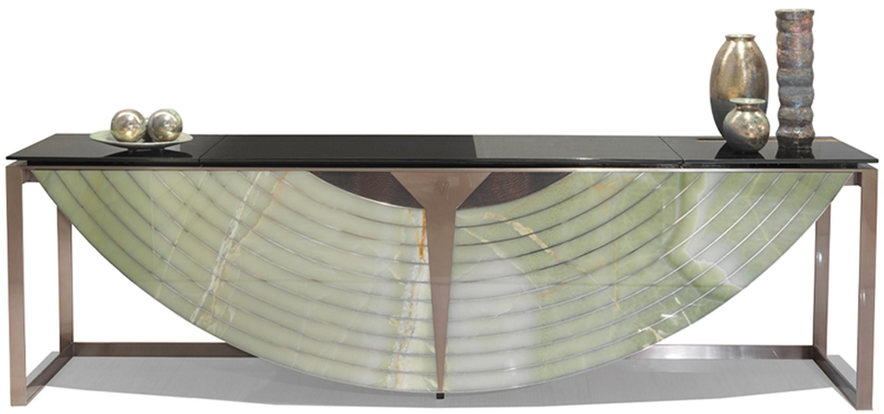

# INTHE WORLD

Where The Road Is Far
And The Horse Is In A Hurry,
It's Good For Us To Be Safe And Happy
To Record The Precious Beauty Of
Ordinary Days For You~

Visionnaire

# DRESSER

# PEACOCK CHAIR

孔雀椅#休闲椅
size：122*80*97cm

孔雀椅(大)#装饰椅
size：244*95*158cm

# SILENTLY

In The Days Of Slowing Down,
Some Small Things Are Happening

The Bedroom Can Be The Farthest Place From Reality In Your Dream,
You Can Go Anywhere You Want

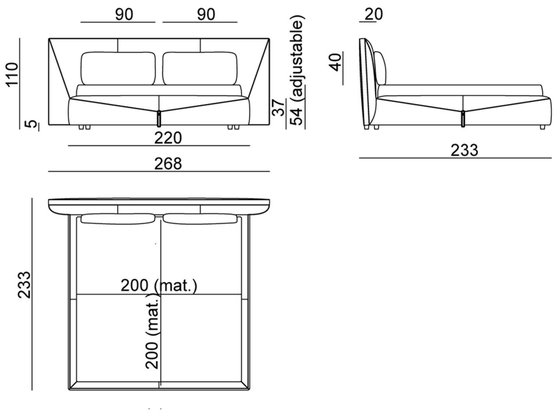


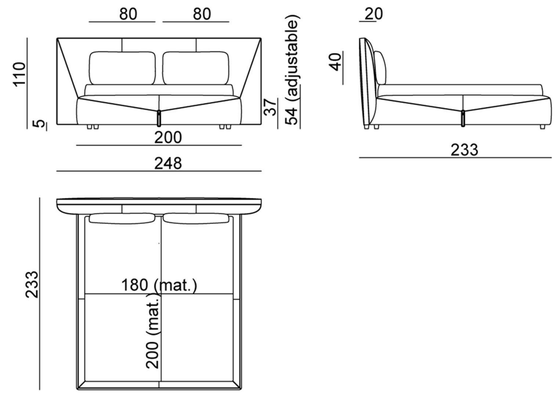


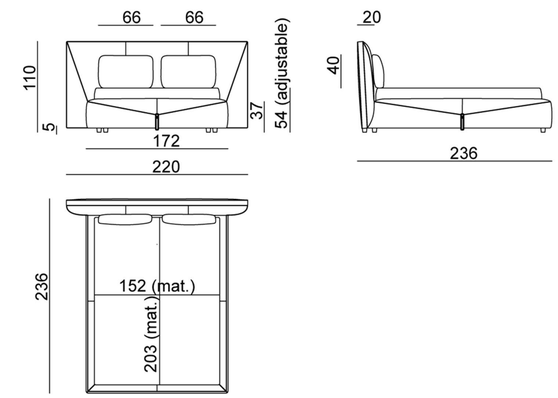


M812#信封床　232*304*111(180*200)cm

## M812#床

size：232*302*111cm

## M812#床头柜

size：60*40*51cm

When You Cook Dishes That Look Like You,
You Have Become An Unforgettable Memory For Me.

坎特杜尔#床　220*320*126cm

M809#床　230*333*119cm

The Dining Table Has A Price,
But The Emotions It Embodies Are Priceless.

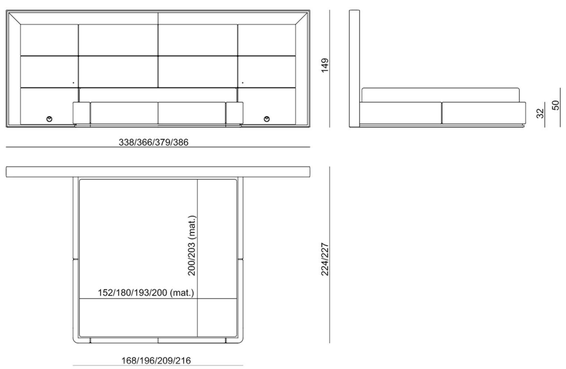


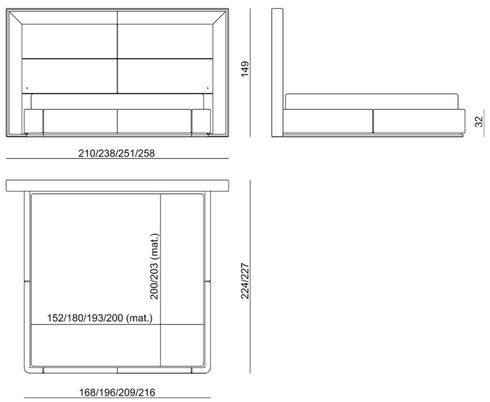


## S837#床

size：228*365*147cm

When You Cook Dishes That Loak Lke You,
You Have Become An Unforgettable Mamary For Me.

巴比伦#床

size：225*320*134cm

In The Days Of Slowing Down,
Some Small Things Are Happening Silently

Freeze Your Wonderful Time
Disdainful Of Being Flashy And Dazzling.
With A Calm And Refined Style Of Life,
Daring To Travel Through The World's Fireworks,
Enjoying Poetry And Elegance From Afar With Ease,
Yet Not Pretentious, Simple, But Not Lacking In Temperament
Comfortable And Beautiful,With Just The Right Grip,
Lying Soft And Carefree To Accompany
You Through Every Leisurely Moment

S836#床 size: 246*207*119cm

M817#床　243*368*142cm